Spare parts list

MKR 600

MKR 600

MKR 600

		Position No.	Part No.	Designation	Quantity	Unit
🗀		1	8MKR6001	rack	1	Stk
🗀		2	8MKR6002	drum	1	Stk
🗀		3	F42120	Wheel bearing	4	Stk
🗀		4	F42112	Drum swivelling	1	Stk
🗀		5	F42126	Lid	1	Stk
🗀		6	101180et	Tumbling system	1	Stk
🗀		7	100879	Hood	1	Stk
🗀		8	101361	Lifting aid	1	Stk
🗀		9	102147	Cooling system	1	Stk
🗀		10	105778	Vacuum system	1	Stk
🗀		11	8MKR3003	feed cable	1	Stk

		Position No.	Part No.	Designation	Quantity	Unit
🗀		12	103297	Switch box	1	Stk
🗀		13	8MKR6003	Control	1	Stk
🗀		14	102181	Switch box	1	Stk
🗀		15	8MKR3005	equipment	1	Stk

1 - rack - 8MKR6001

1 - rack - 8MKR6001

		Position No.	Part No.	Designation	Quantity	Unit
🗀		3	102519	Lid	2	Stk
🗀		4	102517	Traverse	1	Stk
🗀		5	102518	Traverse	1	Stk

3 - Lid - 102519

2 - drum - 8MKR6002

2 - drum - 8MKR6002

		Position No.	Part No.	Designation	Quantity	Unit
		2	F40984	Filter	1	Stk
		3	F27630	Resistance thermometer 300-600	1	Stk

3 - Wheel bearing - F42120

3 - Wheel bearing - F42120

		Position No.	Part No.	Designation	Quantity	Unit
		1	F22065	wheel	1	Stk
		2	F25430	Locking ring	1	Stk
		3	F22231	Shaft	1	Stk

4 - Drum swivelling - F42112

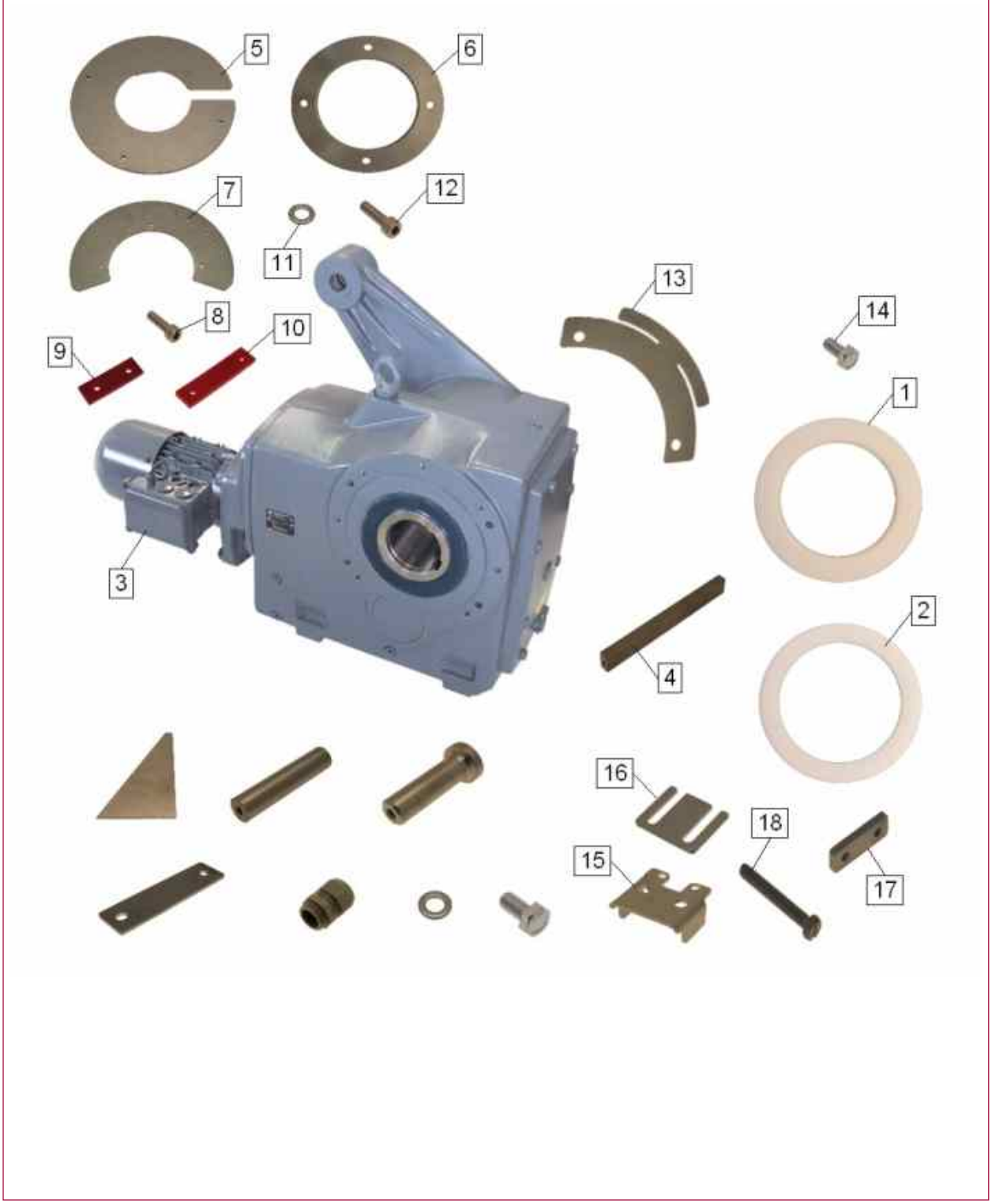

4 - Drum swivelling - F42112

		Position No.	Part No.	Designation	Quantity	Unit
🗀		3	104572	Gear motor	1	Stk

3 - Gear motor - 104572

3 - Gear motor - 104572

		Position No.	Part No.	Designation	Quantity	Unit
🗀		7	F245140	Gear motor with break	1	Stk
		8	F29057	Cable gland	2	Stk

7 - Gear motor with break - F245140

		Position No.	Part No.	Designation	Quantity	Unit
		1	F249174	Solenoid brake	0	Stk
		2	F21513	Rectifier	0	Stk

5 - Lid - F42126

5 - Lid - F42126

		Position No.	Part No.	Designation	Quantity	Unit
🗀		1	F41631	Gear motor	1	Stk
		3	F22125	Ring	2	Stk
		6	F26651	Seal	1	Stk

1 - Gear motor - F41631

1 - Gear motor - F41631

		Position No.	Part No.	Designation	Quantity	Unit
		3	F27693	Washer	8	Stk
		4	F26379	Spring lock washer	14	Stk
		5	F22138	Hexagonal bolt	12	Stk
		6	F27800	Disc	6	Stk
		7	F22141	Cylinder head screw	2	Stk
		8	F20925	Gear motor	1	Stk
		9	F20948	Cable gland	1	Stk
		10	F29058	Cable gland	1	Stk

6 - Tumbling system - 101180et

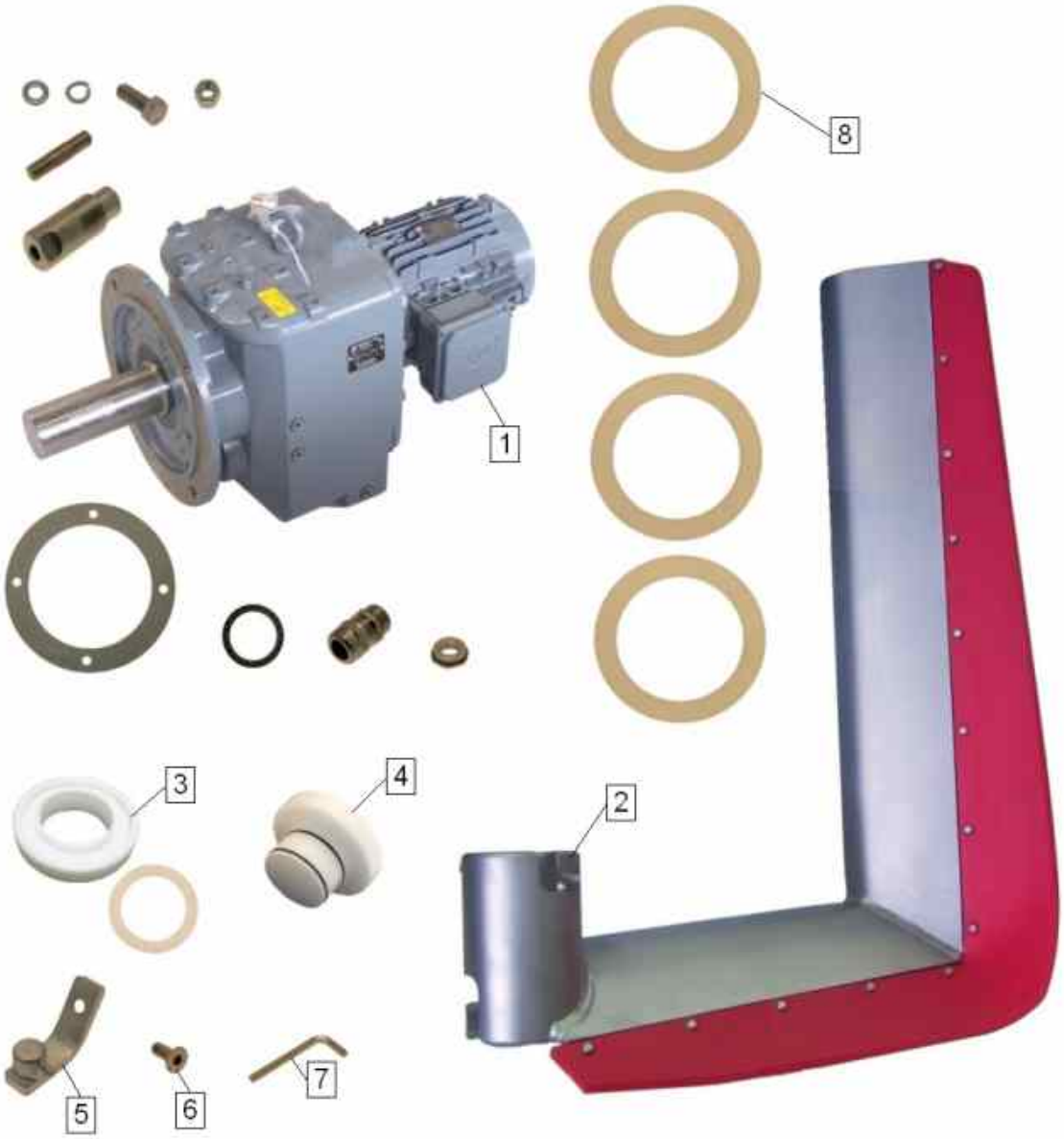

6 - Tumbling system - 101180et

		Position No.	Part No.	Designation	Quantity	Unit
🗀		1	101183	Gear motor	1	Stk
🗀		2	F40321	Tumbling arm	1	Stk
🗀		3	F41639	Ring	1	Stk
🗀		4	F41306	Plug	1	Stk
		5	F41733	locking device	1	Stk
		6	F24013	Countersunk bolt	1	Stk
		7	F144414	Allen key	1	Stk
		8	F28021	Ring	1	Stk

1 - Gear motor - 101183

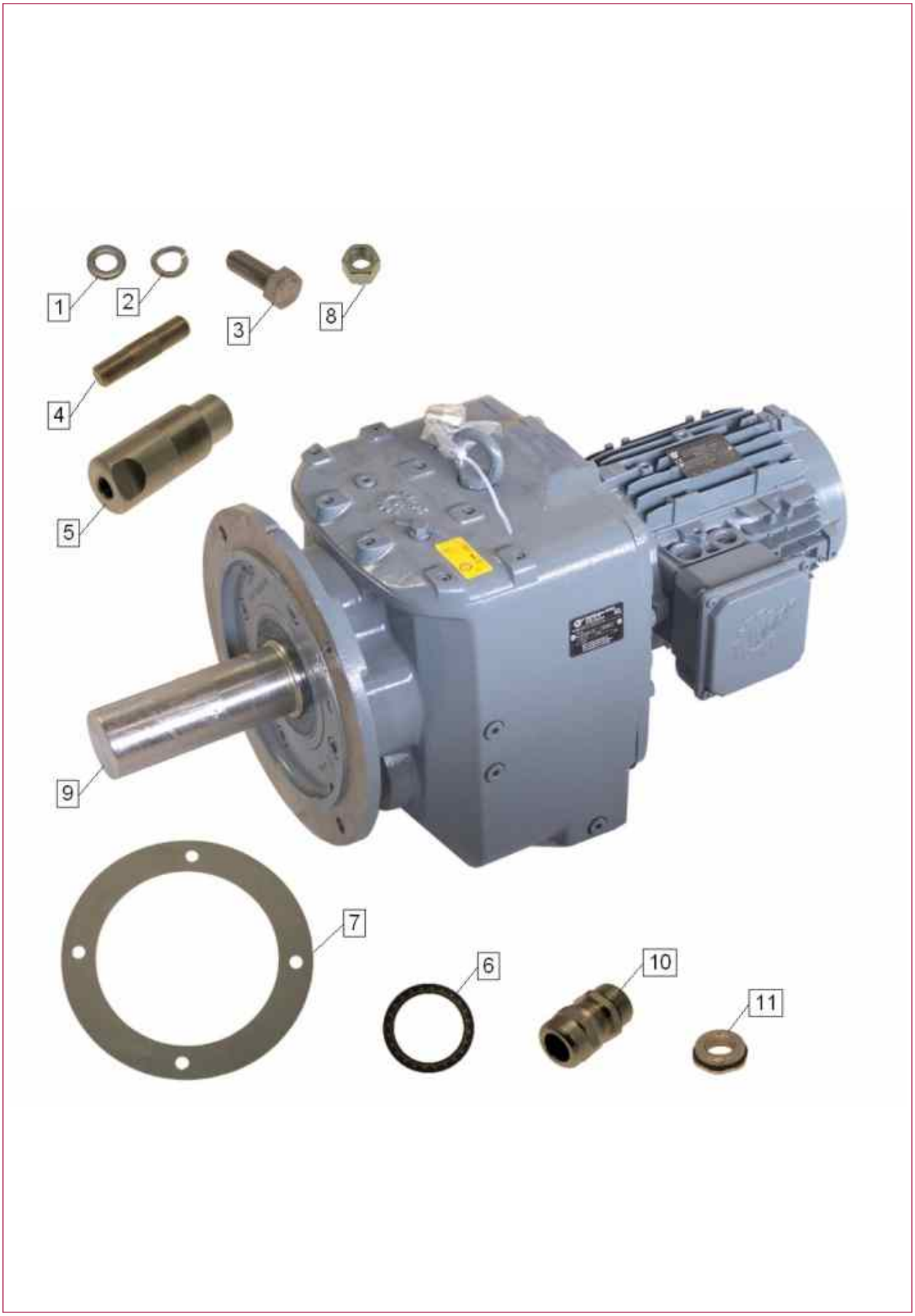

1 - Gear motor - 101183

		Position No.	Part No.	Designation	Quantity	Unit
		1	F23713	Washer	4	Stk
		2	F24015	Spring lock washer	4	Stk
		3	F25287	Hexagonal bolt	3	Stk
		4	106138	bolt	1	Stk
		5	F22265	bolt	1	Stk
		6	F28060	Radial shaft seal	3	Stk
		7	F25237	Seal	1	Stk
		8	F20016	Hexagonal nut	1	Stk
		9	F246514	Gear motor	1	Stk
		10	104152	Cable gland	1	Stk
		11	104153	Reducing adapter	1	Stk

2 - Tumbling arm - F40321

		Position No.	Part No.	Designation	Quantity	Unit
		3	F27225	Scraper MKR 500-600 Poly	1	Stk

3 - Ring - F41639

		Position No.	Part No.	Designation	Quantity	Unit
		1	F22257	Ring	1	Stk
		2	F27680	Seal	1	Stk

4 - Plug - F41306

		Position No.	Part No.	Designation	Quantity	Unit
		1	F26631	Plug	1	Stk
		2	F22260	O-Ring	2	Stk

7 - Hood - 100879

9 - Cooling system - 102147

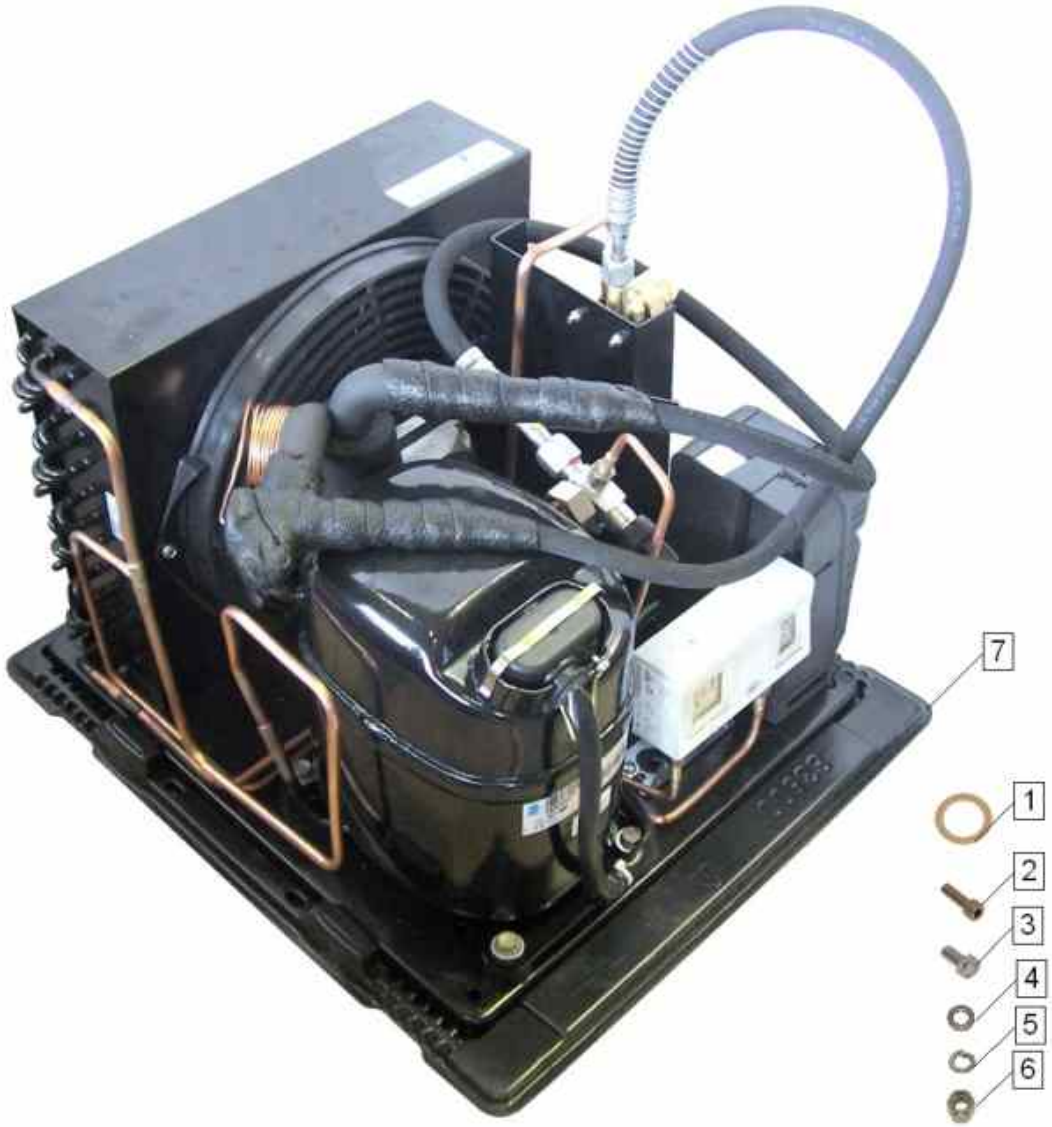

9 - Cooling system - 102147

		Position No.	Part No.	Designation	Quantity	Unit
		1	F21029	O-ring	2	Stk
🗀		7	F28132	Cooling unit	1	Stk

7 - Cooling unit - F28132

		Position No.	Part No.	Designation	Quantity	Unit
		1	106729	Pressure hose	1	Stk
		2	106728	Suction hose	1	Stk
		3	F42205	Cooling flange	1	Stk
		4	F247113	Accumulator dryer	1	Stk

10 - Vacuum system - 105778

10 - Vacuum system - 105778

		Position No.	Part No.	Designation	Quantity	Unit
🗀		1	105780	Vacuum pump	1	Stk
🗀		2	105544	Degermination	1	Stk
🗀		3	105556	Moisture trap	1	Stk
		4	105562	Hose	1	Stk
		5	105538	Elbow connector	1	Stk
		6	106102	Hose	1	Stk

1 - Vacuum pump - 105780

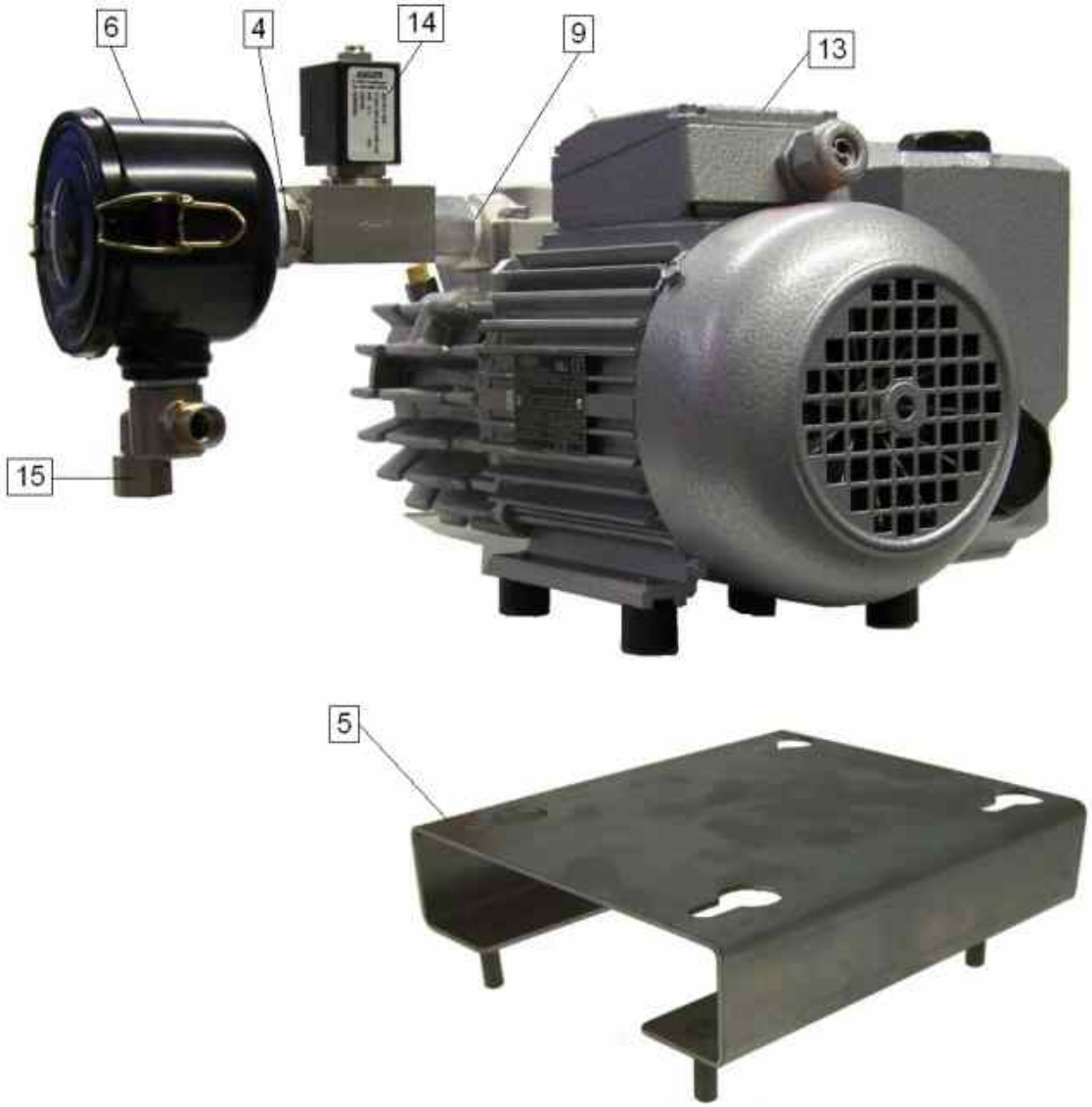

1 - Vacuum pump - 105780

		Position No.	Part No.	Designation	Quantity	Unit
		4	107450		1	Stk
		5	107375		1	Stk
		6	F25931	Air filter housing	1	Stk
		7	F25932	Air filter	1	Stk
		8	105506	Vacuum pump oil	1	ltr
		9	107385		1	Stk
		13	106224	Vacuum pump	1	Stk
		14	F25937	2/2 way valve 230 V	1	Stk
		15	105771	Connector	1	Stk

2 - Degermination - 105544

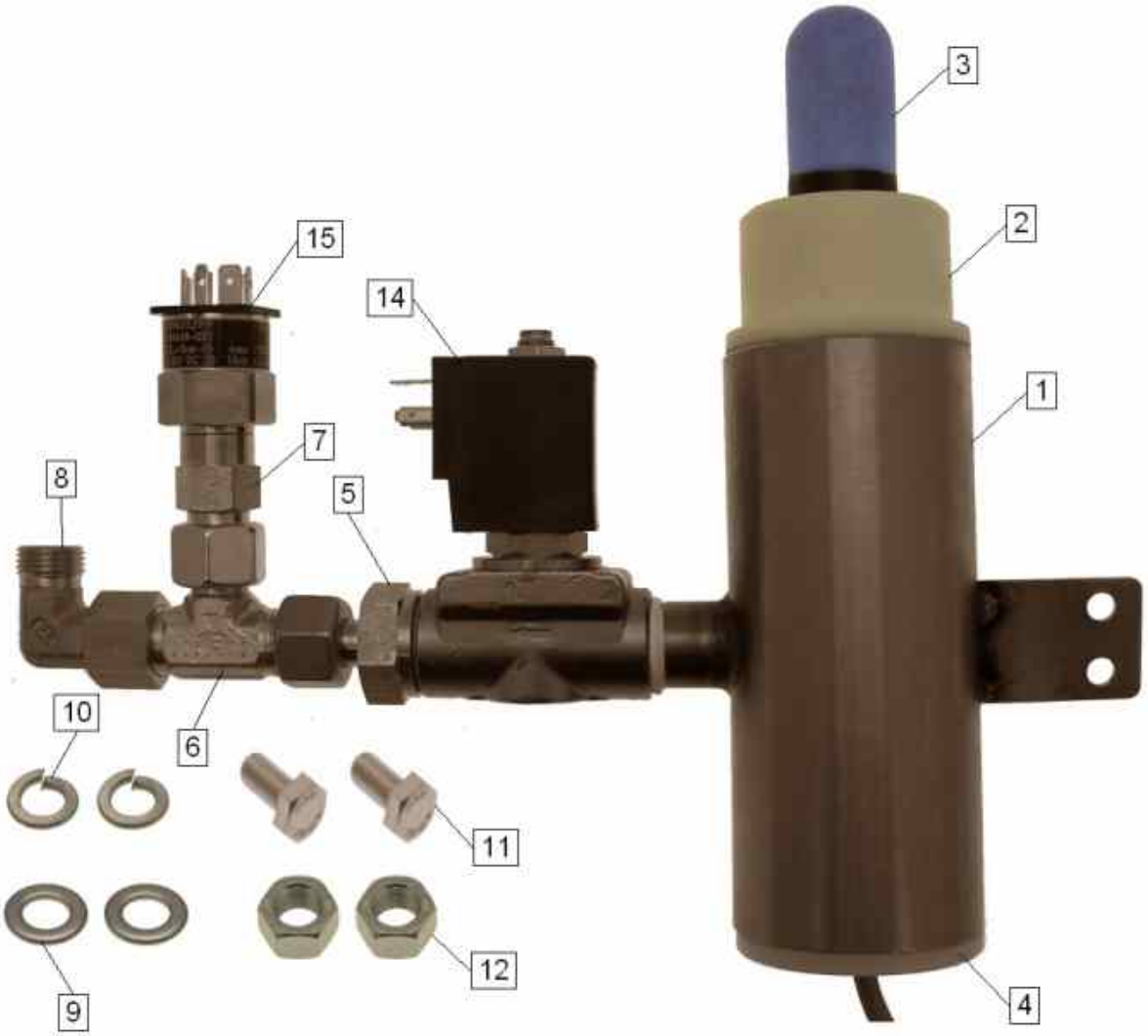

2 - Degermination - 105544

		Position No.	Part No.	Designation	Quantity	Unit
		1	F41575a	Tube	1	Stk
		2	F27389	Housing	1	Stk
		3	105505	Air filter	1	Stk
		4	F22194	bushing	1	Stk
		5	105537	Screw joint	1	Stk
		6	105539	T-piece	1	Stk
		7	105540	Screw joint	1	Stk
		8	105538	Elbow connector	1	Stk
		13	102837	Air ioniser rod-shaped	1	Stk
		14	F25937	2/2 way valve 230 V	1	Stk
		15	F20914	Pressure transmitter	1	Stk

3 - Moisture trap - 105556

3 - Moisture trap - 105556

		Position No.	Part No.	Designation	Quantity	Unit
		6	F27696	Flap to separator	1	Stk

11 - feed cable - 8MKR3003

11 - feed cable - 8MKR3003

		Position No.	Part No.	Designation	Quantity	Unit
		1	F22457	Cable	6500	mm
		2	F242947	Cable gland	1	Stk
		3	F29060	Hexagonal nut	1	Stk
		4	F26441	CEE socket	1	Stk

12 - Switch box - 103297

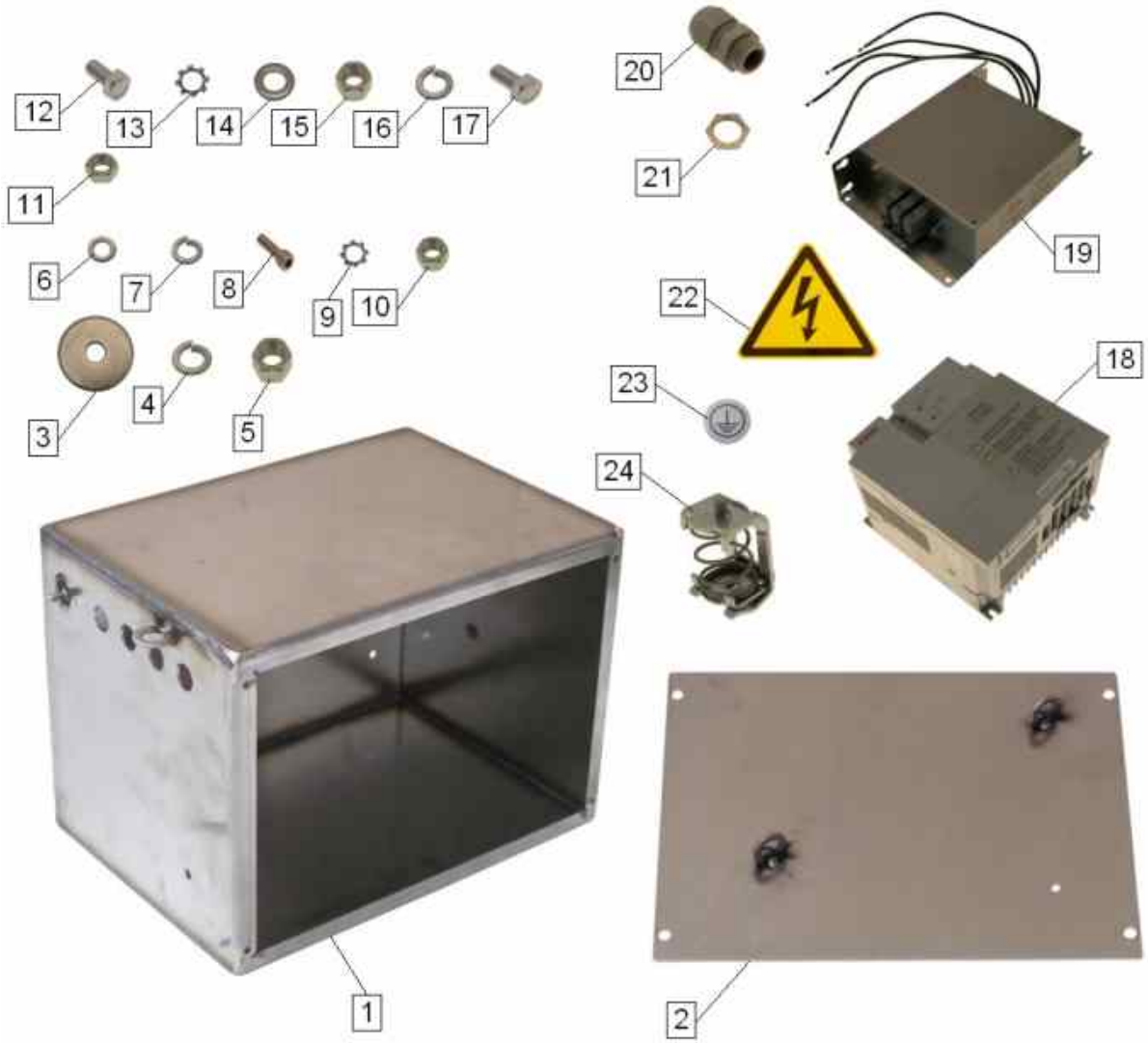

12 - Switch box - 103297

		Position No.	Part No.	Designation	Quantity	Unit
		9	F26336	lock washer	5	Stk
		18	106087	Programmed FC	1	Stk
		19	F28432	Line filter 3.7kW	1	Stk
		20	F20948	Cable gland	4	Stk
		21	F246330	Hexagonal nut	4	Stk
		22	F10131	Sticker	1	Stk
		23	F148541	Sticker	3	Stk
		24	102242	Clamping bracket	1	Stk

13 - Control - 8MKR6003

13 - Control - 8MKR6003

		Position No.	Part No.	Designation	Quantity	Unit
🗀		1	F456962et	Switch box	1	Stk
🗀		2	102180	Housing	1	Stk
		3	106602	Display	1	Stk
		4	107796		1	Stk
		5	F29063	Main switch	1	Stk
		6	F148541	Sticker	3	Stk
		7	106188	Circuit diagram	1	Stk

1 - Switch box - F456962et

		Position No.	Part No.	Designation	Quantity	Unit
		10	F20664	Seal	230	mm
		11	F20664	Seal	812	mm
		21	F251999	Cable gland	1	Stk
		22	F252001	Cable sleeve	1	Stk
		23	F252000	Cable sleeve	2	Stk
		24	F26115	blank plug	2	Stk
		25	F25780	Hexagonal nut	2	Stk
		26	F148541	Sticker	3	Stk
		27	F10131	Sticker	1	Stk
		28	104916	Cable sleeve	1	Stk
		29	106489	Computer box	1	Stk

		Position No.	Part No.	Designation	Quantity	Unit
		30	106635	ground wire	1	Stk

14 - Switch box - 102181

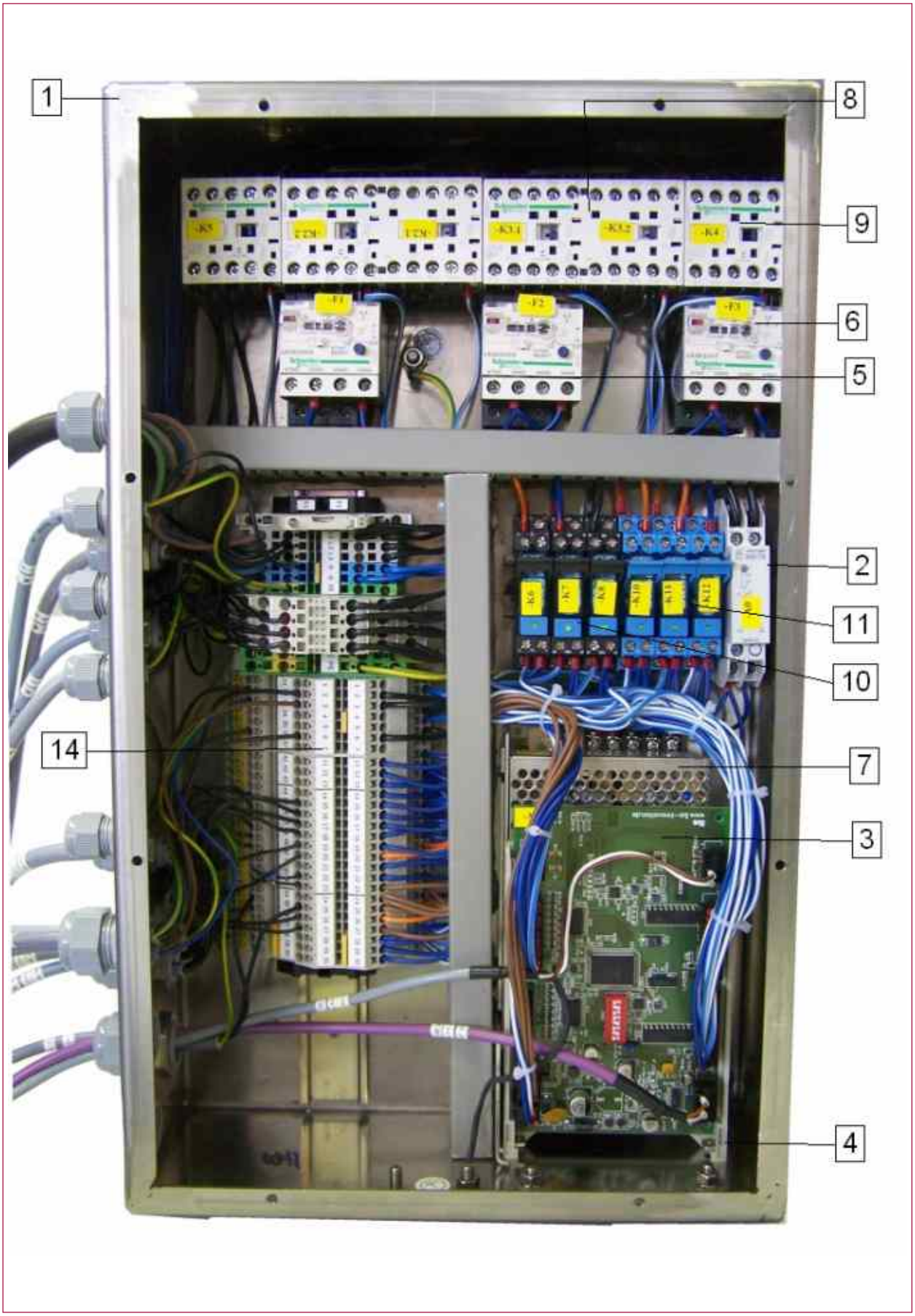

14 - Switch box - 102181

		Position No.	Part No.	Designation	Quantity	Unit
🗀		1	102985	Switch box	1	Stk
		2	F27057	Phase sequence relay	1	Stk
		3	F248184	ETP board	1	Stk
		4	F27618	Circuit board holder	1	Stk
		5	F22283	Motor protect. relay 1.8 -2.6A	2	Stk
		6	F20912	Motor protect. relay 1.2 -1.8A	1	Stk
		7	F28410	Power supply 230VAC/24VDC	1	Stk
		8	F20916	turn contactor	2	Stk
		9	F27091	Power contactor 24VDC	2	Stk
		10	F41539	Relay	3	Stk
		11	F41540	Relay	3	Stk

		Position No.	Part No.	Designation	Quantity	Unit
		12	F27915	Resistor	1	Stk
		13	102189	Resistor	1	Stk
		14	F29141	Terminal strip	1	Stk
		15	F29058	Cable gland	1	Stk
		16	F25780	Hexagonal nut	1	Stk
		17	F20948	Cable gland	7	Stk
		18	F246330	Hexagonal nut	8	Stk
		19	F29057	Cable gland	3	Stk
		20	F29060	Hexagonal nut	5	Stk
		21	F27625	blank plug	2	Stk
		22	101611	feed cable	1	Stk
		23	101600	Cable main power supply filter	1	Stk

		Position No.	Part No.	Designation	Quantity	Unit
		24	101602	Cable for cooling unit	1	Stk
		25	101599	Cable for FC	1	Stk
		26	101604	Cable for vacuum pump	1	Stk
		27	101607	Cable for vessel pivoting	1	Stk
🗀		28	101610	Cable for vacuum valve	1	Stk
🗀		29	101609	Cable for vent valve	1	Stk
🗀		30	101595	Cable for limit switch drum	1	Stk
🗀		31	101589	Cable for limit switch S3	1	Stk
		32	101606	Cable FC current set-point val	1	Stk
		33	101601	Cable for brake recitfier	1	Stk
		34	104174	Cable for PC - ETP board	1	Stk
		35	F247397	blank plug	1	Stk

		Position No.	Part No.	Designation	Quantity	Unit
		36	F26132	Sealing ring	3	Stk
		37	F10131	Sticker	1	Stk
		38	F148541	Sticker	5	Stk
🗀		39	102826	Cable for pressure transmitter	1	Stk
		40	106718	Litz 1.5mm²	2	Stk

1 - Switch box - 102985

		Position No.	Part No.	Designation	Quantity	Unit
		15	F20664	Seal	518	mm

28 - Cable for vacuum valve - 101610

		Position No.	Part No.	Designation	Quantity	Unit
		1	F23343	Cable	2000	mm
		2	F23309	Socket	1	Stk

29 - Cable for vent valve - 101609

		Position No.	Part No.	Designation	Quantity	Unit
		1	105259	Socket with cabel	1	Stk
		2	105260	Seal-valve plug	1	Stk

30 - Cable for limit switch drum - 101595

		Position No.	Part No.	Designation	Quantity	Unit
		1	F28791	Cable	2500	mm
		2	F20932	Limit switch	1	Stk
		3	F29058	Cable gland	1	Stk

31 - Cable for limit switch S3 - 101589

		Position No.	Part No.	Designation	Quantity	Unit
		1	F28791	Cable	2500	mm
		2	F22285	Limit switch	1	Stk
		3	F29058	Cable gland	1	Stk

39 - Cable for pressure transmitter - 102826

		Position No.	Part No.	Designation	Quantity	Unit
		1	F23343	Cable	1200	mm
		2	F23309	Socket	1	Stk

15 - equipment - 8MKR3005

15 - equipment - 8MKR3005

		Position No.	Part No.	Designation	Quantity	Unit
		1	102188	Shovel	1	Stk
		2	F27396	Scraper	1	Stk
		3	F246278	trolley	1	Stk
		4	F27037	Trolley	1	Stk